Compact Fittings



Features

* Ultra-compact design, ideal for small equipment and installations in confined spaces.
* Compact body and reduced outside diameter while maintaining the same flow performance as standard fittings.
* Nickel-plated finish for superior corrosion resistance.
* Oval-shaped release sleeve enables easy tube handling, even in tight spaces.
* One-touch tube insertion ensures quick and secure connection.
* Threaded ports are fitted with both a gasket and an O-ring to ensure excellent sealing performance

How to order

TPL 04 - 01 S C

1 2 3 4

1 Model

2 Applicable Tube O. D.
04 : Ø4
06 : Ø6

3 Port Size
M3 : M3 x 0.5
M5 : M5 x 0.8

Standard Specifications

Fluid	Air
Working pressure	0~150psi (0~9.9kgf/㎠) * In combination with the applied tube, it is based on the maximum operating pressure of the tube
Working temperature	0~60 ℃
Applicable tube O.D.	Ø4, Ø6

Structure

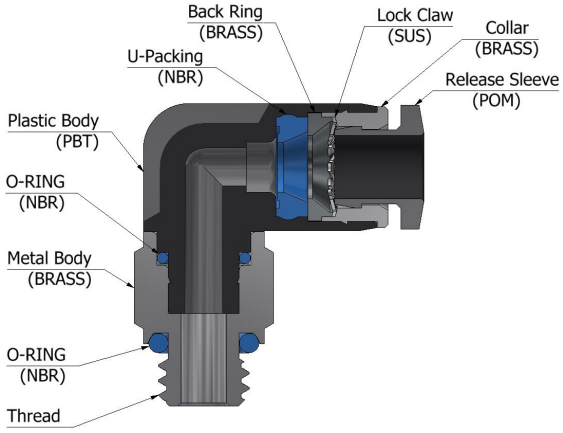

TPOC



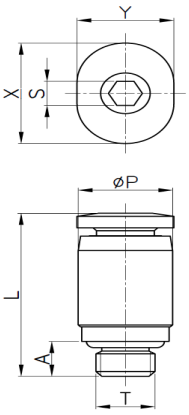

MODEL	øD	øP	T	L	A	B	H (Hex)	X	Y
TPOC 06-M5C	6	10.0	M5*0.8p	18.6	3.6	12.7	2.5	12.4	10.2

TPL



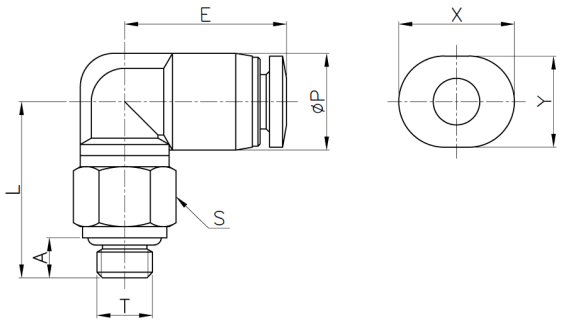

MODEL	øP	T	L	E	A	S (Hex)	X	Y
TPL 04-M3C	8.7	M3*0.5p	15.3	14.6	3.0	8	10.4	8.2
TPL 04-M5C	8.7	M5*0.8p	15.9	14.6	3.6	8	10.4	8.2
TPL 06-M5C	10.8	M5*0.8p	16.9	15.5	3.6	8	12.4	10.2

TPT



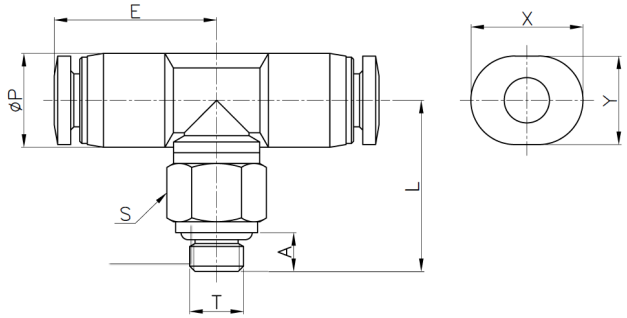

MODEL	øP	T	L	E	A	S (Hex)	X	Y
TPT 06-M5C	10.8	M5*0.8p	16.9	16.0	3.6	8	12.4	10.2

TPUC



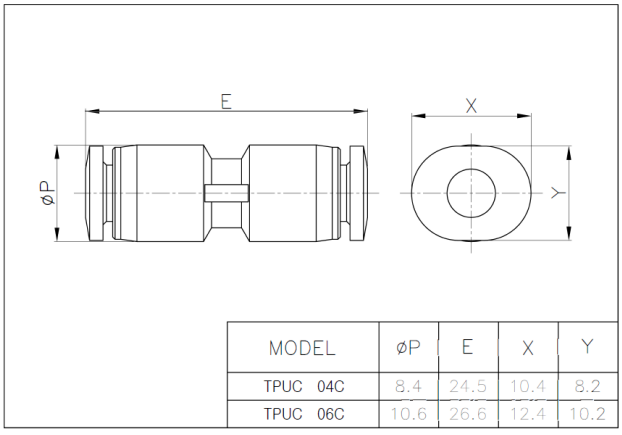

MODEL	øP	E	X	Y
TPUC 04C	8.4	24.5	10.4	8.2
TPUC 06C	10.6	26.6	12.4	10.2

TPUL



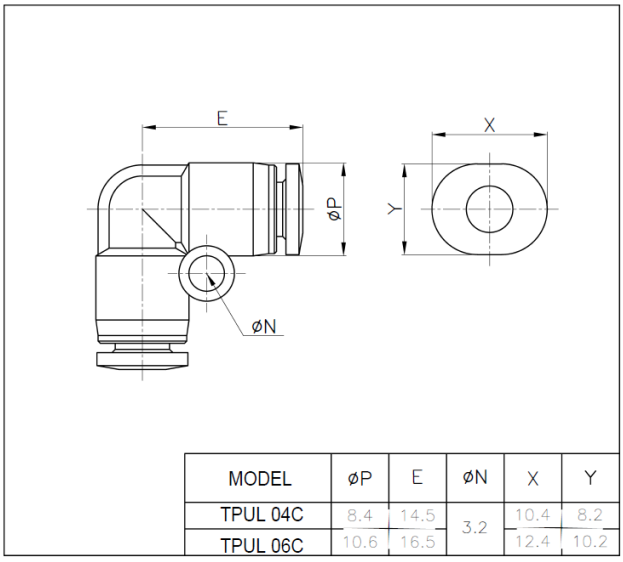

MODEL	øP	E	øN	X	Y
TPUL 04C	8.4	14.5	3.2	10.4	8.2
TPUL 06C	10.6	16.5		12.4	10.2

TPUT



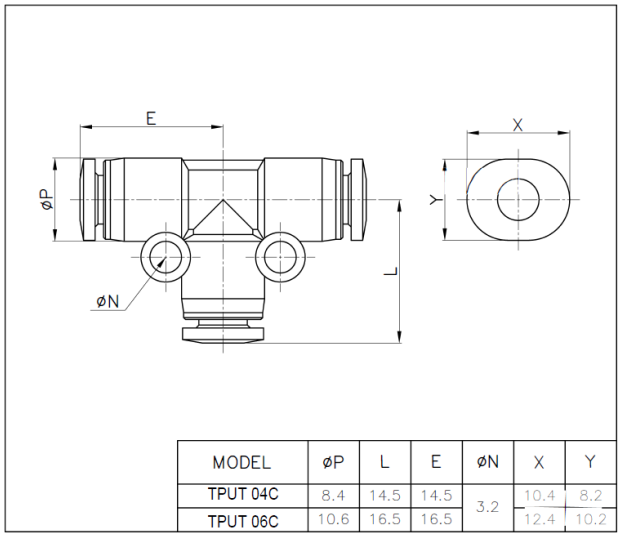

MODEL	øP	L	E	øN	X	Y
TPUT 04C	8.4	14.5	14.5	3.2	10.4	8.2
TPUT 06C	10.6	16.5	16.5		12.4	10.2

TPG



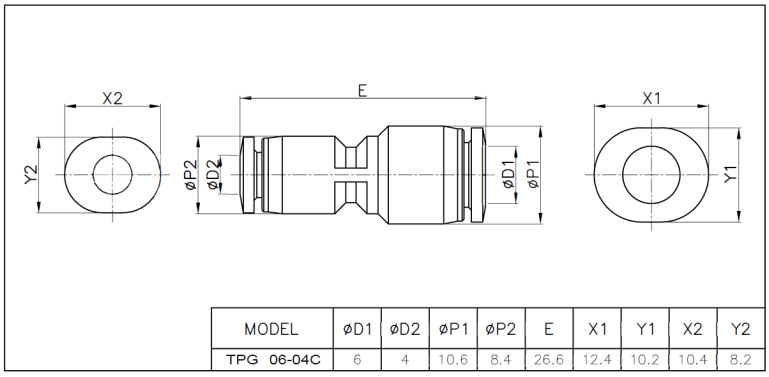

MODEL	øD1	øD2	øP1	øP2	E	X1	Y1	X2	Y2
TPG 06-04C	6	4	10.6	8.4	26.6	12.4	10.2	10.4	8.2

TPY



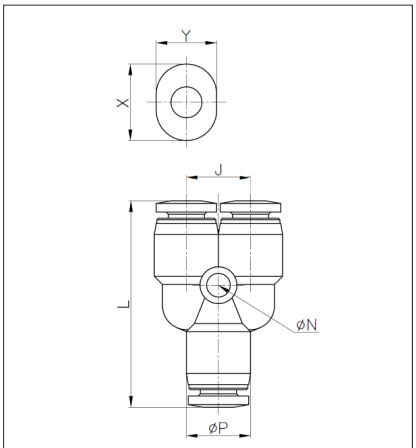

MODEL	øP	L	J	øN	X	Y
TPY 06C	10.8	30.6	10.8	3.2	12.4	10.2

TPW



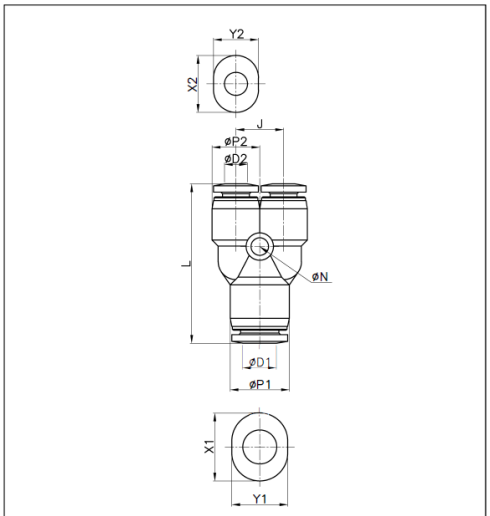

MODEL	øD1	øD2	øP1	øP2	L	J	øN	X1	Y1	X2	Y2
TPW 06-04C	6	4	10.8	8.7	29.1	8.7	3.2	12.4	10.2	10.4	8.2

TPST



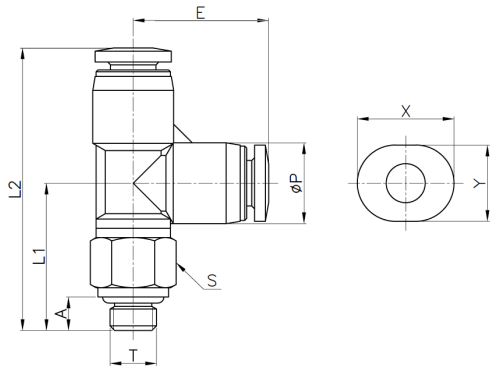

MODEL	øP	T	L1	L2	E	A	S (Hex)	X	Y
TPST04-M3C	8.7	M3*0.5p	15.3	29.8	14.6	3.0	8	10.4	8.2
TPST06-M5C	10.8	M5*0.8p	16.9	33.4	16.5	3.6	8	12.4	10.2

TSC SERIES

Speed Controller

TSC Series



Features

- This valve is used for speed control and residual pressure release.
- Fine flow adjustment enables easy and precise flow control.
- It ensures consistent speed control

Order No.

TSC – 4 – M5 – S

① ② ③

Size Ø	Thread Size	Sealant
TSC4 : Ø4	M5: M5x8	Blank: No sealant
TSC6 : Ø6	M6: M6x1.0	S: Sealant
TSC8 : Ø8	01 : Rc1/8	
TSC10 : Ø10	02 : Rc1/4	
TSC12 : Ø12	03 : Rc3/8	
	04 : Rc1/2	

Standard Specifications

Fluid	Air
Working pressure	0~150 psi (0~9.9 kgf/㎠) * In combination with the applied tube, it is based on the maximum operating pressure of the tube.
Working temperature	0~60 °C
Applicable tube O.D.	Ø4, Ø6, Ø8, Ø10, Ø12

TSC SERIES

Speed Controller

Dimension

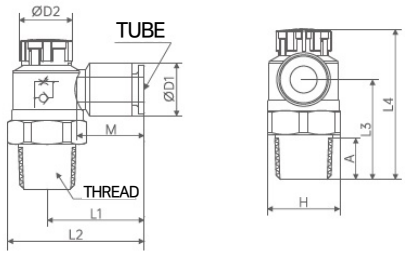

Tube O.D.	Thread	Model	H	ØD1	ØD2	L1	L2	L3	L4		A	M	Weight (g)
									Max.	Min.			
Ø4	M5×0.8	TSC4-M5	9	8.7	9.4	17.5	22.3	17.2	27	26	3.5	12	5.6
Ø6	M5×0.8	TSC6-M5	9	10.7	9.4	19.4	24.2	17.2	27	26	3.5	13	6
Ø4	M6×1.0	TSC4-M6	9	8.7	9.4	17.5	22.3	17.2	27	26	4	12	5.8
Ø6	M6×1.0	TSC6-M6	9	10.7	9.4	19.4	24.2	17.6	27	27	4	13	6.2
Ø4	1/8	TSC4-01	13	10.7	12	21.5	28.7	18.5	31	29	7.5	15	10.2
Ø6	1/8	TSC6-01	13	12.7	12	23	30.2	18.5	31	29	7.5	16	10.6
Ø8	1/8	TSC8-01	13	14.7	12	25.6	32.8	18.5	31	29	7.5	18	11.7
Ø10	1/8	TSC10-01	13	17.8	12	29.2	36.4	18.5	31	29	7.5	20	13.8
Ø4	1/4	TSC4-02	17	12.7	13	22.5	31.8	22.5	37	35	9.7	15	19.9
Ø6	1/4	TSC6-02	17	12.7	13	22.5	31.8	22.5	37	35	9.7	16	19.1
Ø8	1/4	TSC8-02	17	14.7	13	26.5	35.8	22.9	37	35	9.7	18	20.4
Ø10	1/4	TSC10-02	17	17.8	13	30.6	39.9	22.8	37	35	9.7	20	22.4
Ø12	1/4	TSC12-02	17	20.4	13	32.1	41.4	23.5	37	35	9.7	20	24.5
Ø6	3/8	TSC6-03	19	14.7	16.5	28.3	38.6	28	42	41	11	16	32
Ø8	3/8	TSC8-03	19	14.7	16.5	28.6	38.9	28	42	41	11	18	32.3
Ø10	3/8	TSC10-03	19	17.8	16.5	31	41.3	28	42	41	11	20	34
Ø12	3/8	TSC12-03	19	20.4	16.5	30	40.3	28.5	42	41	11	20	35.9
Ø6	1/2	TSC6-04	24	14.7	18.7	29.3	42.1	37.5	51	49	14.3	16	55.5
Ø8	1/2	TSC8-04	24	14.7	18.7	27.8	40.6	37.6	51	49	14.3	18	53.4
Ø10	1/2	TSC10-04	24	17.8	18.7	30.2	43	37.5	51	49	14.3	20	54.8
Ø12	1/2	TSC12-04	24	20.4	18.7	34.2	47	37.5	51	49	14.3	20	56.3

TS Series

Speed Controller - Union



Features

- Speed control valve for pneumatic actuators.
- Precise flow adjustment allows easy speed control.

Order No.

TS100F – **04**

① Size

100
200
205
300
400

② Tube O.D.

04 : 4mm
06 : 6mm
08 : 8mm
10 : 10mm
12 : 12mm

Standard Specifications

Fluid	Air
Max. allowable pressure	1.5 Mpa
Operating pressure	0.1~1.0MPa(14.5~145psi)
Operating temperature	-5~60°C
Applicable tube	Nylon, Soft nylon, Polyurethane

TS Series

Speed Controller - Union

Dimensions

Tube O.D.	Item	ØD1	ØD2	ØD3	ØD4	ØD5	L1	L2	L3	L4		L5	L6	L7	L8	M	Weight (g)
										Max.	Min.						
Ø4	TS100F-04	9.3	3.3	5.5	9.4	10.3	38.0	5.1	11.8	23.9	22.8	11.0	15.6	8.8	10.3	13	4.7
Ø6	TS100F-06	11.7	3.3	5.5	9.4	10.3	40.2	6.0	12.8	25.0	24.0	11.0	15.8	8.7	12.4	13	6.2
Ø4	TS200F-04	12.0	3.3	5.5	12.0	12.5	43.5	6.6	13.4	31.0	29.7	12.6	17.2	10.6	12.3	15	8.8
Ø6	TS200F-06	12.2	3.3	5.5	12.0	12.5	43.9	6.6	13.4	31.0	29.7	12.6	17.2	10.6	12.3	16	8.6
Ø6	TS205F-06	15.0	4.3	7.8	13.0	16.0	60.1	8.3	18.3	37.1	35.5	17.0	22.6	12.0	16.0	14	18.8
Ø8	TS205F-08	15.0	4.3	7.8	13.0	16.0	56.7	8.3	18.3	37.1	35.5	17.0	22.6	12.0	16.0	18	15.1
Ø6	TS300F-06	18.5	4.3	8.0	16.5	20.0	-	10.0	21.8	42.9	41.3	22.5	25.2	12.0	20.3	14	30.6
Ø8	TS300F-08	18.5	4.3	8.0	16.5	20.0	68.9	10.0	21.8	42.9	41.3	22.5	25.2	12.0	20.3	18	27.4
Ø10	TS300F-10	18.5	4.3	8.0	16.5	20.0	69.7	10.0	21.8	42.9	41.3	22.5	25.2	12.0	20.3	21	27.6
Ø10	TS400F-10	21.2	4.3	8.0	18.7	26.4	78.9	11.3	23.7	50.8	49.4	28.0	33.0	14.0	26.0	21	42.9
Ø12	TS400F-12	21.5	4.3	8.0	18.7	26.4	79.1	11.3	23.7	50.8	49.4	28.0	33.0	14.0	26.0	21	42.3

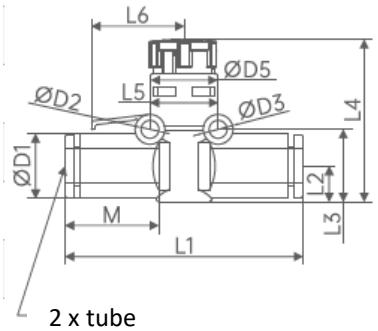

2 x tube

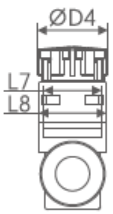

THV Series

Hand Valve



Features

- The valve simply turns the compressed air to the pneumatic equipment on/off by rotating the handle.
- With the residual pressure inside the machine removed, maintenance and inspection can be performed safely.
- When turned off, the 3-way valve releases the residual pressure inside the machine to the atmosphere while blocking the inflow of supplied air.

Order No.

VHK2 – **08F** – **08F**

① ② ③

① Port

VHK2 : 2 port
VHK3 : 3 port

② P port

04F : 4mm
06F : 6mm
08F : 8mm
10F : 10mm
12F : 12mm
M5 : M5x0.8
01S : 1/8
02S : 1/4
03S : 3/8
04S : 1/2

③ A port

04F : 4mm
06F : 6mm
08F : 8mm
10F : 10mm
12F : 12mm
M5 : M5x0.8
01S : 1/8
02S : 1/4
03S : 3/8
04S : 1/2

Standard Specifications

Fluid	Air
Max. allowable pressure	1.5 Mpa
Operating pressure	0.1~1.0MPa(14.5~145psi)
Operating temperature	0~60°C
Applicable tube	Nylon, Soft nylon, Polyurethane

THV Series

Hand Valve

Dimensions

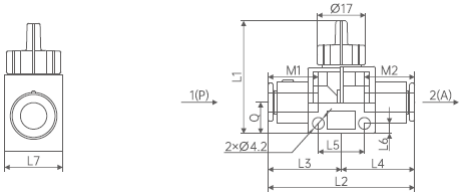

1(P) Tube O.D.	2(A) Tube O.D.	Item	L1	L2	L3	L4	L5	L6	L7	M1	M2	Q	Weight (g)
Ø4	Ø4	THV□-04F-04F	40.7	48	24	24	16.4	3.6	18.2	15	15	10.9	15.2
Ø6	Ø4	THV□-06F-04F	40.7	47.6	23.9	23.7	16.4	3.6	18.2	16	15	10.9	14.7
	Ø6	THV□-06F-06F	40.7	47.8	23.9	23.9	16.4	3.6	18.2	16	16	10.9	14.6
Ø8	Ø6	THV□-08F-06F	40.7	53.8	26	27.8	16.4	3.6	18.2	18	16	10.9	19.1
	Ø8	THV□-08F-08F	40.7	52	26	26	16.4	3.6	18.2	18	18	10.9	16.8
Ø10	Ø8	THV□-10F-08F	45	63.1	31.1	32	21.4	4	22.2	20	18	14	34.2
	Ø10	THV□-10F-10F	45	62.2	31.1	31.1	21.4	4	22.2	20	20	14	30.2
Ø12	Ø10	THV□-12F-10F	45	62.6	31.3	31.3	21.4	4	22.2	21	20	14	30
	Ø12	THV□-12F-12F	45	62	31	31	21.4	4	22.2	21	21	14	29.3

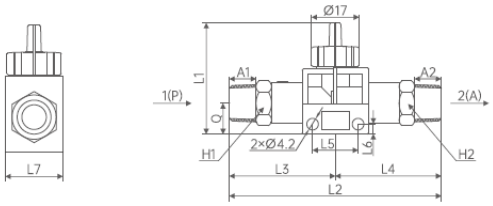

1(P) Thread	2(A) Thread	Item	H1	H2	L1	L2	L3	L4	L5	L6	L7	A1	A2	Q	Weight (g)
M5	M5	THV□-M5-M5	10	10	40.7	60	29.8	30.2	16.4	3.6	18.2	3.5	3.5	10.9	21.6
1/8	M5	THV□-01S-M5	12	12	40.7	62.4	32	30.4	16.4	3.6	18.2	6.5	3.5	10.9	25.4
	1/8	THV□-01S-01S	12	12	40.7	64	32	32	16.4	3.6	18.2	6.5	6.5	10.9	26.1
1/4	1/8	THV□-02S-01S	14	14	40.7	73	38	35	16.4	3.6	18.2	9.7	6.5	10.9	35.7
	1/4	THV□-02S-02S	14	14	40.7	76	38	38	16.4	3.6	18.2	9.7	9.7	10.9	38.8
3/8	1/4	THV□-03S-02S	17	17	45	86.2	43.1	43.1	21.4	4	22.2	10	9.7	14	59.9
	3/8	THV□-03S-03S	17	17	45	86.2	43.1	43.1	21.4	4	22.2	10	10	14	60.3
1/2	3/8	THV□-04S-03S	21	21	45	89.9	46.2	43.7	21.4	4	22.2	12.5	10.5	14	73.9
	1/2	THV□-04S-04S	21	21	45	92.4	46.2	46.2	21.4	4	22.2	12.5	12.5	14	76.7

THV Series

Hand Valve

Dimensions

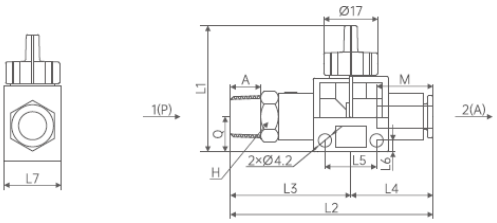

1(P) Thread	2(A) Tube O.D.	Item	H	L1	L2	L3	L4	L5	L6	L7	A	M	Q	Weight (g)
M5	Ø4	THV□-M5-04F	10	40.7	53.7	30	23.7	16.4	3.6	18.2	3.5	15	10.9	18.3
	Ø6	THV□-M5-06F	12	40.7	54.7	30.7	24	16.4	3.6	18.2	3.5	16	10.9	20.4
1/8	Ø4	THV□-01S-04F	12	40.7	56	32.1	23.9	16.4	3.6	18.2	6.5	15	10.9	19
	Ø6	THV□-01S-06F	12	40.7	56	31.8	24.2	16.4	3.6	18.2	6.5	16	10.9	20.3
	Ø8	THV□-01S-08F	14	40.7	61	34.9	26.1	16.4	3.6	18.2	6.7	18	10.9	24.5
	Ø10	THV□-01S-10F	17	45	71.1	40.1	31	21.4	4	22.2	6.7	20	14	41.7
1/4	Ø4	THV□-02S-04F	14	40.7	59.7	35.8	23.9	16.4	3.6	18.2	9.7	15	10.9	25.9
	Ø6	THV□-02S-06F	14	40.7	60	36	24	16.4	3.6	18.2	9.7	16	10.9	25.5
	Ø8	THV□-02S-08F	14	40.7	64.4	38.6	25.8	16.4	3.6	18.2	9.7	18	10.9	27.5
	Ø10	THV□-02S-10F	17	45	74.4	43.4	31	21.4	4	22.2	9.7	20	14	43.3
	Ø12	THV□-02S-12F	21	45	75.1	44.1	31	21.4	4	22.2	9.7	21	14	49.6
3/8	Ø6	THV□-03S-06F	17	40.7	60.6	36.6	24	16.4	3.6	18.2	10	16	10.9	30.3
	Ø8	THV□-03S-08F	17	40.7	63.7	37.6	26.1	16.4	3.6	18.2	10	18	10.9	31
	Ø10	THV□-03S-10F	17	45	74.2	43.2	31	21.4	4	22.2	10	20	14	45.4
	Ø12	THV□-03S-12F	21	45	77.5	46.5	31	21.4	4	22.2	10	21	14	53.3
1/2	Ø10	THV□-04S-10F	21	45	77.7	46.7	31	21.4	4	22.2	12.5	20	14	58
	Ø12	THV□-04S-12F	21	45	77.4	46.4	31	21.4	4	22.2	12.5	21	14	53.3

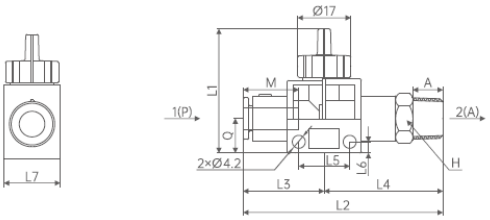

1(P) Tube O.D.	2(A) Thread	Item	H	L1	L2	L3	L4	L5	L6	L7	A	M	Q	Weight (g)
Ø4	M5	THV□-04F-M5	10	40.7	53.7	23.7	30	16.4	3.6	18.2	3.5	15	10.9	18.2
	1/8	THV□-04F-01S	10	40.7	55.9	23.7	32.2	16.4	3.6	18.2	6.5	15	10.9	18.9
	1/4	THV□-04F-02S	14	40.7	59.6	23.7	35.9	16.4	3.6	18.2	6.5	15	10.9	26
Ø6	M5	THV□-06F-M5	10	40.7	54.4	23.9	30.5	16.4	3.6	18.2	3.5	16	10.9	20
	1/8	THV□-06F-01S	12	40.7	55.8	23.9	31.9	16.4	3.6	18.2	9.7	16	10.9	20.6
	1/4	THV□-06F-02S	14	40.7	59.7	23.9	35.8	16.4	3.6	18.2	10.0	16	10.9	25.3
	3/8	THV□-06F-03S	17	40.7	60.5	23.9	36.6	16.4	3.6	18.2	10.0	16	10.9	30
Ø8	1/8	THV□-08F-01S	14	40.7	60.9	26	34.9	16.4	3.6	18.2	9.7	18	10.9	24.3
	1/4	THV□-08F-02S	14	40.7	64.6	26	38.6	16.4	3.6	18.2	10.0	18	10.9	27.6
	3/8	THV□-08F-03S	17	40.7	64.1	26	38.1	16.4	3.6	18.2	10	18	10.9	32
Ø10	1/8	THV□-10F-01S	17	45	71.2	31	40.2	21.4	4	22.2	7	20	14	41.7
	1/4	THV□-10F-02S	17	45	74.4	31	43.4	21.4	4	22.2	10	20	14	43.4
	3/8	THV□-10F-03S	17	45	74.3	31	43.3	21.4	4	22.2	10	20	14	45.5
	1/2	THV□-10F-04S	21	45	78.2	31	47.2	21.4	4	22.2	12.5	20	14	58
Ø12	1/4	THV□-12F-02S	21	45	74.7	31	43.7	21.4	4	22.2	10	21	14	48.9
	3/8	THV□-12F-03S	21	45	75	31	44	21.4	4	22.2	10.5	21	14	51.1
	1/2	THV□-12F-04S	21	45	77.7	31	46.7	21.4	4	22.2	12.5	21	14	53.1

TVH Series

Vacuum Ejector



Features

- Compact and Lightweight Direct-Piping Vacuum Ejector

Order No.

TVH 05 D S – 01 – 01 – 01

① ② ③ ④ ⑤

① Nozzle Size

05 : Ø0.5
07 : Ø0.7
10 : Ø1.0
13 : Ø1.3
15 : Ø1.5
18 : Ø1.8
20 : Ø2.0

② Vacuum pressure

S : -88kPa
L : -48kPa

③ SUP port

06 : Ø6
08 : Ø8
10 : Ø10
12 : Ø12
01 : Rc 1/8
02 : Rc 1/4
03 : Rc 3/8

④ VAC port

06 : Ø6
08 : Ø8
10 : Ø10
12 : Ø12
16 : Ø16
01 : Rc 1/8
02 : Rc 1/4
03 : Rc 3/8
04 : Rc 1/2

⑤ EXH port

06 : Ø6
08 : Ø8
10 : Ø10
12 : Ø12
16 : Ø16
01 : Rc 1/8
02 : Rc 1/4
03 : Rc 3/8
04 : Rc 1/2

Standard Specifications

Item	Nozzle size [mm]	Vacuum Pressure Reached [kPa]		Max. Suction Flow Rate [L/min(ANR)]		Air Consumption [L/min(ANR)]
		S	L	S	L	
TVH05	0.5	-88	-48	5	8	13
TVH07	0.7			12	20	23
TVH10	1.0			24	34	46
TVH13	1.3			40	70	78
TVH15	1.5	-88	-53	55	75	95
TVH18	1.8			65	110	150
TVH20	2			85	135	185

TVH Series

Vacuum Ejector

Dimensions

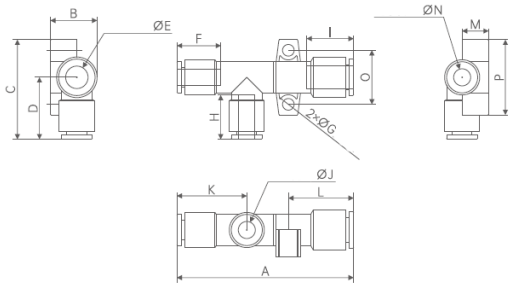

Item	A	B	C	D	ØE	F	ØG	H	I	ØJ	K	L	M	ØN	O	P	Weight(g)
TVH05DS-06-06-06	58.2	14.5	34	22	6	16.8	3.1	16.8	16.8	6	24	21	7.9	6	17	24	11.2
TVH05DL-06-06-06	58.2	14.5	34	22	6	16.8	3.1	16.8	16.8	6	24	21	7.9	6	17	24	11.2
TVH07DS-06-06-06	61	14.5	34	22	6	16.8	3.1	16.8	16.8	6	24	22	7.9	6	17	24	11.8
TVH07DL-06-06-06	61	14.5	34	22	6	16.8	3.1	16.8	16.8	6	24	22	7.9	6	17	24	11.8
TVH10DS-06-06-08	65	17.2	37	23	6	16.8	4.2	16.8	18.4	6	26	24	9.8	8	20	28	15.2
TVH10DL-06-06-08	65	17.2	37	23	6	16.8	4.2	16.8	18.4	6	26	24	9.8	8	20	28	15.2
TVH13DS-08-10-10	72.8	18.2	42.5	27.5	8	18.4	4	20	20	10	28	26	10.5	10	22	30	25.3
TVH13DL-08-10-10	72.8	18.2	42.5	27.5	8	18.4	4	20	20	10	28	26	10.5	10	22	30	25.3
TVH15DS-10-12-12	93.3	21.3	47	29.5	10	21.5	4.1	21	21	12	31	32.6	12	12	27	35	43.2
TVH15DL-10-12-12	93.3	21.3	47	29.5	10	21.5	4.1	21	21	12	31	32.6	12	12	27	35	43.2
TVH18DS-12-12-12	114	21	41	30.5	12	21	3.5	21	15.8	12	35.5	50	17	12	10	-	-
TVH18DL-12-12-12	114	21	41	30.5	12	21	3.5	21	15.8	12	35.5	50	17	12	10	-	-
TVH20DS-12-16-16	124.6	26.8	16	32.5	12	21	3.5	17.2	17.2	16	38.5	54.3	21.7	16	12	-	-
TVH20DL-12-16-16	124.6	26.8	16	32.5	12	21	3.5	17.2	17.2	16	38.5	54.3	21.7	16	12	-	-

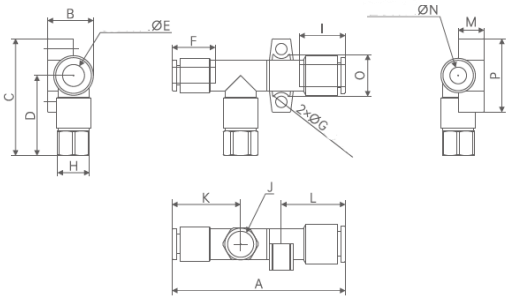

Item	A	B	C	D	ØE	F	ØG	H	I	J	K	L	M	ØN	O	P	Weight(g)
TVH05DS-06-01-06	58.2	14.5	41.5	29.5	6	16.8	3.1	12	16.8	Rc1/8	24	21	7.9	6	17	24	18.9
TVH05DL-06-01-06	58.2	14.5	41.5	29.5	6	16.8	3.1	12	16.8	Rc1/8	24	21	7.9	6	17	24	18.9
TVH07DS-06-01-06	61	14.5	41.5	29.5	6	16.8	3.1	12	16.8	Rc1/8	24	22	7.9	6	17	24	19.5
TVH07DL-06-01-06	61	14.5	41.5	29.5	6	16.8	3.1	12	16.8	Rc1/8	24	22	7.9	6	17	24	19.5
TVH10DS-06-01-08	65	17.2	44.5	30.5	6	16.8	4.2	12	18.4	Rc1/8	26	24	9.8	8	20	28	22.7
TVH10DL-06-01-08	65	17.2	44.5	30.5	6	16.8	4.2	12	18.4	Rc1/8	26	24	9.8	8	20	28	22.7
TVH13DS-08-02-10	72.8	18.2	55	40	8	18.4	4	17	21.5	Rc1/4	28	26	10.5	10	22	30	45.9
TVH13DL-08-02-10	72.8	18.2	55	40	8	18.4	4	17	21.5	Rc1/4	28	26	10.5	10	22	30	45.9
TVH15DS-10-03-12	93.3	21.3	56	38.5	10	21.5	4.1	19	21	Rc3/8	31	32.6	12	12	27	35	59.8
TVH15DL-10-03-12	93.3	21.3	56	38.5	10	21.5	4.1	19	21	Rc3/8	31	32.6	12	12	27	35	59.8

TFL Series

Vacuum Filter



Features

- Compact, space-saving inline filter
- Built-in push-in (one-touch) fittings
  - ➢ Ø4, Ø6 and Ø8 push-in fittings are built in, making tubing easy to connect and remove
- Easy to maintain and service
  - ➢ The transparent case lets you check the element's condition from the outside

Order No.

TFL 7 4 – B

① ② ③

① Size

Symbol	Size	Filtration Area
5	10L/min	750mm2
10	20L/min	1260mm2

③ Bracket

Blank	None
B	Bracket

② Tube O.D.

Symbol	Tube O.D.	TFL5	TFL7
04	ø4	◆	-
06	ø6	◆	◆
08	ø8	-	◆
10	ø10	-	◆
12	ø12	-	◆

Standard Specifications

Model	**TFL5□**		**TFL7□**			
Tube O.D.	**Ø4**	**Ø6**	**Ø6**	**Ø8**	**Ø10**	**Ø12**
Fluid	Air · Nitrogen					
Operating Pressure	-100kPa to 1.0MPa (at 20°C)					
Flow Rate (Positive Pressure) L/min	100	200	250	450	550	650
Flow Rate (Vacuum) L/min	10	20	30	70	80	100
Proof Pressure MPa	1.5 (at 20°C)					
Operating / Ambient Temp. Range °C	0 to 60					
Filtration Rating (μm)	5 (95% capture efficiency)					
Filtration Area mm²	750		1260			
Applicable Tube Material	Nylon · Soft Nylon · Polyurethane					
Internal Volume cm³	4.5		6		7	
Case Material	Polycarbonate					

TFL Series

Vacuum Filter

Dimensions

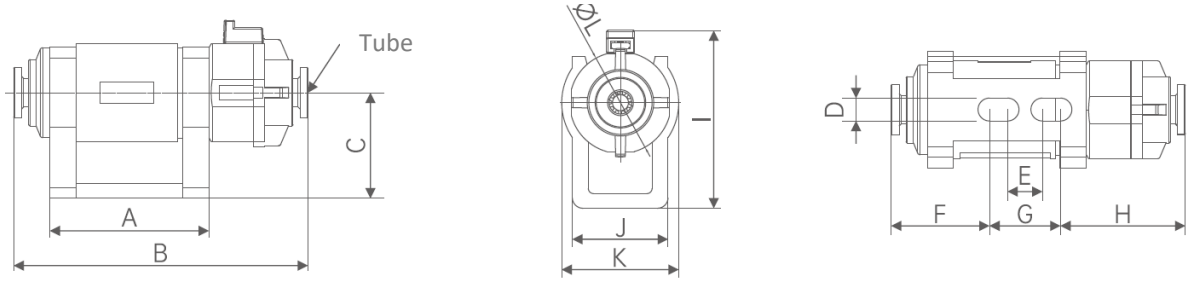

Tube O.D.	Model	A	B	C	D	E	F	G	H	I	J	K	ØL	Weight (g)
Ø4	TFL53-B	30	55.3	20	4.4	6.7	18.4	13.3	23.6	33.4	18	23	19	15.4
Ø6	TFL54-B	30	55.3	20	4.4	6.7	18.4	13.3	23.6	33.4	18	23	19	15.2
Ø6	TFL74-B	33.5	76.5	23.7	4.3	8.6	26	18.5	30	39.5	19.4	28	23.6	27.4
Ø8	TFL75-B	33.5	76.5	23.7	4.3	8.6	26	18.5	30	39.5	19.4	28	23.6	28.6
Ø10	TFL76-B	33.5	77.7	23.7	4.3	8.6	26.7	18.5	32.5	39.5	19.4	28	23.6	31.2
Ø12	TFL77-B	33.5	80.3	23.7	4.3	8.6	26.7	18.5	35.1	39.5	19.4	28	23.6	31.3